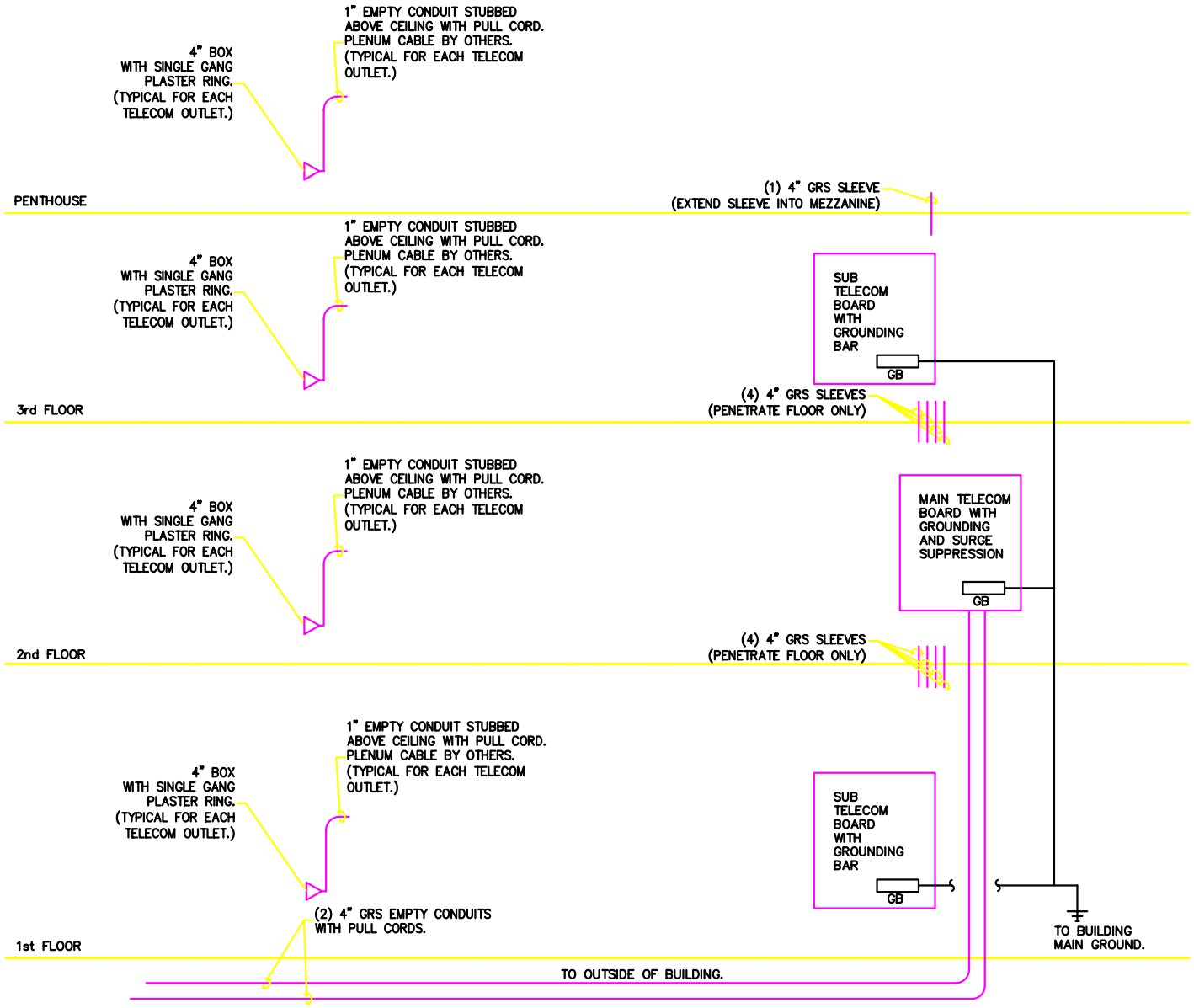

Telcom Riser Diagram